MTD薪割り機

LS27CC Cub Cadet

178-LU エンジンパーツリスト

a+

LS27CC Cub Cadet 178-LU パーツリスト

Air Cleaner

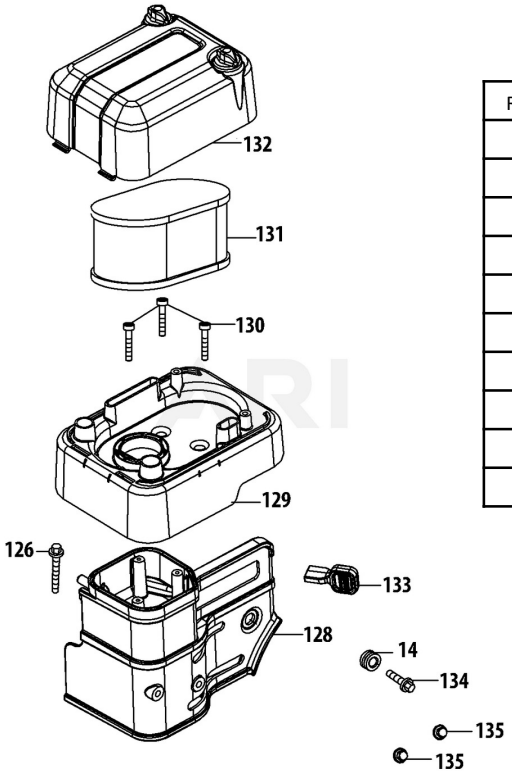

Ref #	Part #	Description
14	736-04452	Isolator Bushing
126	710-04969	Bolt M6×30
128	951-14392	Air Filter Base
129	951-12408	Middle Air Filterbox
130	710-05352	Countersunk Screw
131	951-12260	Air Filter
132	951-12047	Air Filter Cover Assembly
133	951-12409	Throttle Control Knob
134	710-04968	Bolt M6×16
135	712-04213	Acorn Nut

Fly wheel & Blower Housing

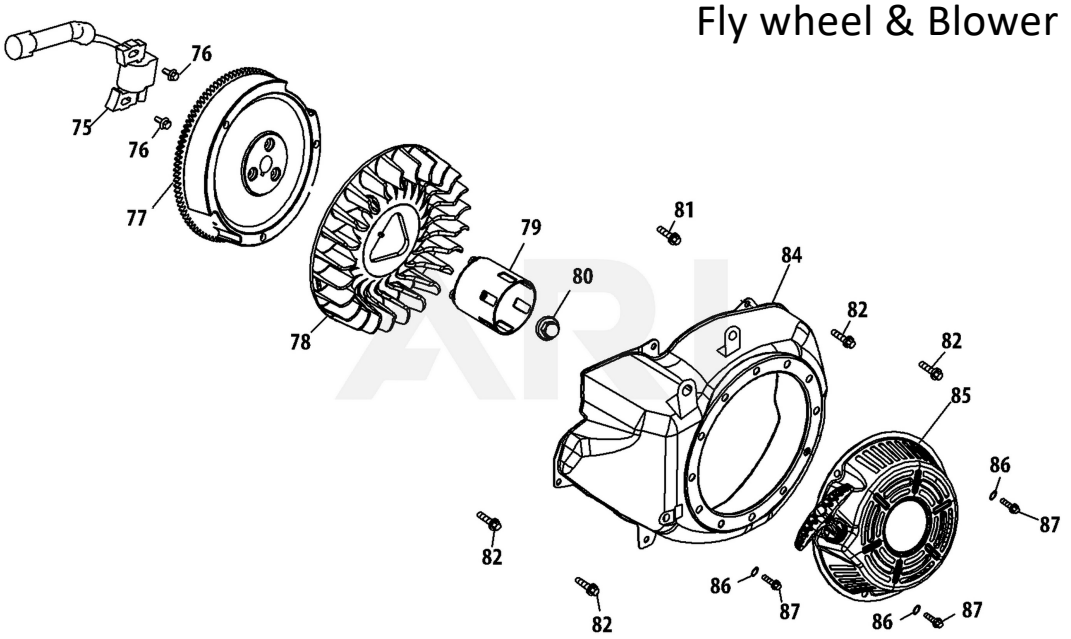

Ref #	Part #	Description	Ref #	Part #	Description
75	951-12375	Ignition Coil Assembly	81	710-04968	Bolt M6×16
76	710-05350	Ignition Coil Bolt	82	710-04915	Bolt M6×12
77	951-12401	Flywheel	84	951-12402	Starter Housing
78	951-11217	Fan, Cooling	85	951-12376	Recoil Starter
79	951-11218	Pulley, Starter	86	736-04455	Gasket 6
80	712-04220	Nut, Special, M16×1.5	87	710-04974	Bolt M6×10

LS27CC Cub Cadet　178-LU　パーツリスト

Carburetor Assembly

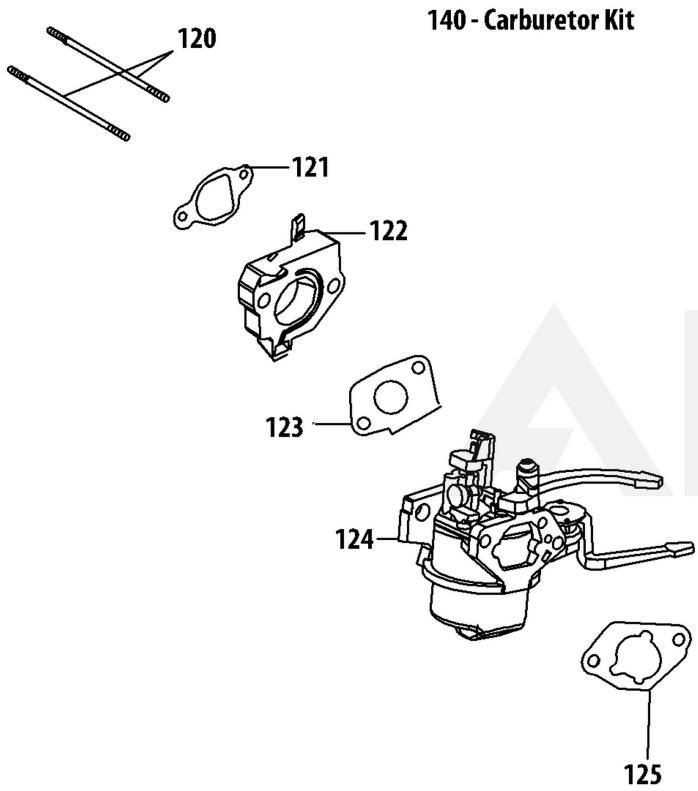

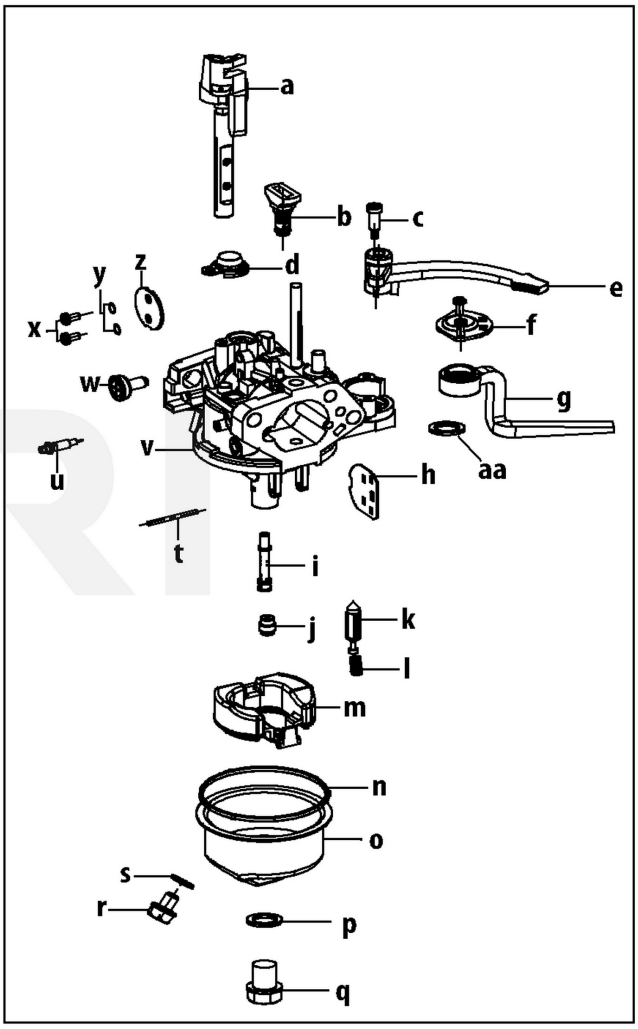

Ref #	Part #	Description	Ref #	Part #	Description
120	710-05351	Stud	k	N/A	Needle Valve
121	951-11225	Carburetor Insulator Gasket	l	N/A	Needle Valve Spring
122	951-11222	Carburetor Insulator	m	N/A	Float
123	951-11223	Carburetor Gasket	n	951-11970	Fuel Bowl Gasket
124	951-12791	Carburetor Assembly	o	N/A	Fuel Bowl Assembly
125	951-12406	Carburetor Gasket Plate	p	951-11348	Fuel Bowl Gasket
140	951-12762A	Carburetor Kit	q	710-04945	Fuel Bowl Mounting Bolt
a	N/A	Throttle Shaft	r	710-04938	FUEL DRAIN PLUG
b	N/A	Idle Jet Assembly	s	951-11349	Fuel Drain Plug Gasket
c	710-05459	Choke Control Screw	t	N/A	Float Pin
d	N/A	Lock Plate	u	N/A	Mixture Screw
e	951-12422	Choke Knob	v	N/A	Carburetor Body
f	951-12792	Fuel Shutoff Cover	w	710-05469	Idle Speed Adjusting Screw
g	951-12423	Fuel Shutoff Lever	x	N/A	Screw M3×5
h	N/A	Choke Plate	y	736-04638	Lock Washer
i	N/A	Emulsion Tube	z	N/A	Throttle Plate
j	N/A	Main Jet			

LS27CC Cub Cadet 178-LU パーツリスト Crankshaft & Crankcase

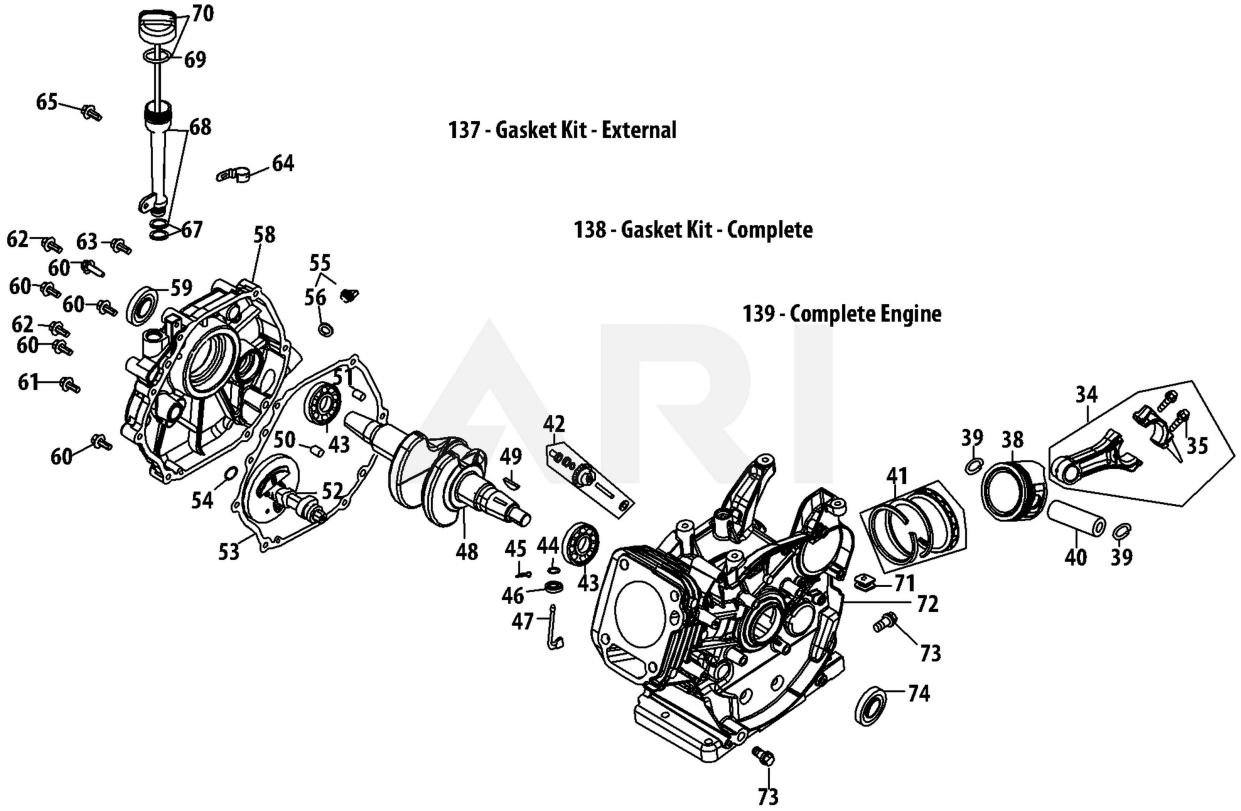

Ref #	Part #	Description	Ref #	Part #	Description
34	951-12066	Connecting Rod Assembly	58	951-12395	Crankcase Cover
35	710-05319	Connecting Rod Bolt	58	951-05049	Crankcase Cover Kit
38	951-12043	Piston	59	951-12396	Oil Seal, 30×46×8
39	951-11632	PISTON PIN SNAP RING	60	710-04971	Bolt M8×38
40	951-12044	Piston Pin	61	710-04972	Bolt M8×45
41	951-12387	Piston Ring Set	62	710-05052	Bolt M8×35
42	751-12068	Governor Gear/Shaft Assembly	63	710-04968	Bolt M6×16
43	951-12069	Radial Ball Bearing	64	951-11320	Dipstick Clamp
44	736-04453	Washer 8×20×0.8	65	710-05349	Bolt M6×8
45	714-04077	Cotter Pin	67	951-11381	O-Ring
46	951-11958	Governor Seal	68	951-12073	Oil Fill Tube Assembly
47	951-12071	Governor Arm Shaft	69	951-11904	O-Ring, Dipstick
48	951-05050	Crankshaft Kit	70	951-11971A	Disptick Assembly
49	951-10307	Woodruff Key	71	951-12398	Wire Clamp Rubber
50	715-04102	Dowel Pin 9×12	72	951-05051	Crankcase Service Kit
51	715-04092	Dowel Pin 7×14	72	951-05045	Shortblock Assembly
52	951-12072	Camshaft Assy.	73	951-12514	Oil Drain Plug
53	951-11374	Crankcase Cover Gasket	74	951-12400	Oil Seal 30×46×8
54	736-04545	Washer 16×24×0.5	137	951-05048	Gasket Kit - External
55	951-11283	Oil Fill Plug Assembly	138	951-05047	Gasket Kit - Complete
56	951-11577	O-RING 15.8 x 2.5	139	952Z178-LU	Complete Engine

LS27CC Cub Cadet　178-LU　パーツリスト

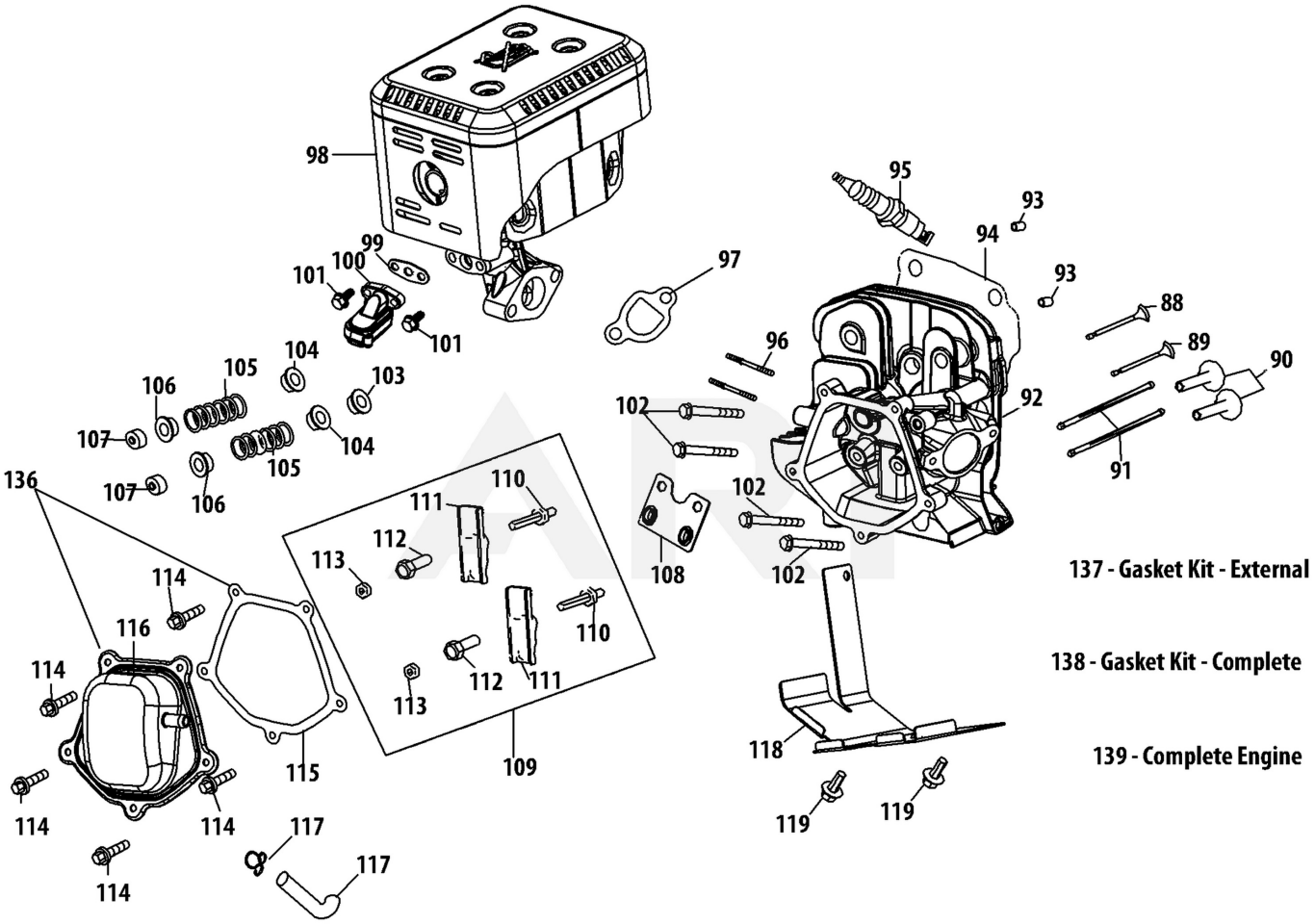

Ref #	Part #	Description	Ref #	Part #	Description
88	951-11198	Valve Kit	106	951-12080	Retainer, Ex.Valve Spring
89	951-11198	Valve Kit	107	951-12081	Adjuster, Exh Valve
90	951-11962	Tappet	108	951-11965	Push Rod Guide
91	951-11199	Push Rod Kit	109	951-11981	Rocker Arm Assembly
92	951-11226	Cylinder Head Kit	110	710-04962	Bolt, Pivot
92	951-05046	Cylinder Head Assembly	111	951-11966	Rocker Arm
93	715-04097	Dowel Pin 12×20	112	751-11123	Adjusting Nut ,Valve
94	951-12076	Gasket, Cylinder Head	113	751-11124	Nut, Pivot Locking
95	951-10292	Spark Plug/F6Rtc	114	710-05054	Valve Cover Bolt
96	710-04964	Stud M8×48.5	115	951-11967	Valve Cover Gasket
96	951-11207	Muffler Stud Assembly	116	951-11220	Valve Cover
97	951-11212	Exhaust Pipe Gasket	117	731-07059	Breather Hose
98	951-05042	Muffler Assembly	117	726-04101	Hose Clamp
99	951-12743	Secondary Air Gasket	118	951-12405	Air Shield
100	951-05043	Reed Valve Assembly	119	710-04915	Bolt M6×12
101	710-06094	Bolt M6×16	136	951-11333	Valve Cover Kit
102	710-04965	Bolt M10×1.25×80	137	951-05048	Gasket Kit - External
103	951-11964	Intake Valve Seal	138	951-05047	Gasket Kit - Complete
104	951-12077	Valve Spring Retainer	139	952Z178-LU	Complete Engine
105	951-12078	Valve Spring			

LS27CC Cub Cadet 178-LU パーツリスト

Fuel Tank & Mounting

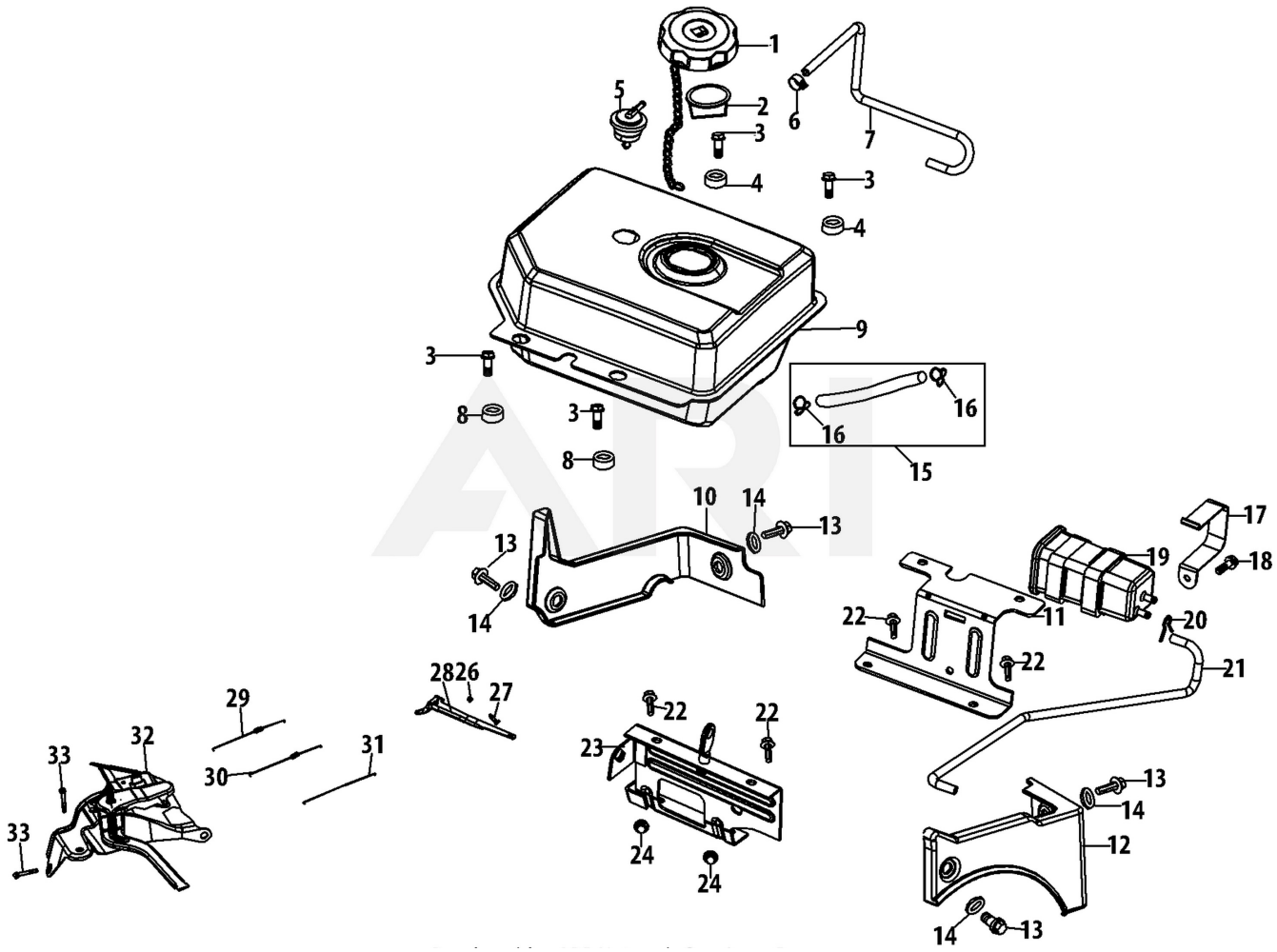

Ref #	Part #	Description	Ref #	Part #	Description
1	951-12535	Fuel Cap Assembly	17	951-14385	Carbon Canister Bracket
1	951-14076	Tether	18	710-04915	Bolt M6×12
2	951-14265	Fuel Level Indicator	19	951-14386	Carbon Canister
3	710-04970	Bolt M8×20	20	951-14387	Breather Hose Clamp
4	750-05312	Gas Tank Isolator	21	951-14388	Primer Hose
5	951-14376	Rollover Valve Assembly	22	710-04921	Bolt M8×14
6	951-14377	Fuel Hose Clamp	23	951-14389	Gas Tank Support Bracket
7	951-14380	Primer Hose	24	712-04219	Nut M8
8	750-05313	Gas Tank Isolator	26	712-04212	Nut M6
9	951-14381	Fuel Tank Assembly	27	710-04908	Governor Arm Bolt
10	951-11184	Governor Cover	28	951-14200	Governor Arm
11	951-14383	Rear Mounting Bracket Assy.	29	951-11202	Governor Spring
12	951-14384	Decorate Cover	30	951-11203	Throttle Linkage Spring
13	710-04968	Bolt M6×16	31	951-11204	Throttle Linkage
14	736-04452	Isolator Bushing	32	951-12386	Component Bracket
15	951-11200	Fuel Line Kit	33	710-04916	Bolt, M6×14
16	951-11700	Fuel Hose Clamp			